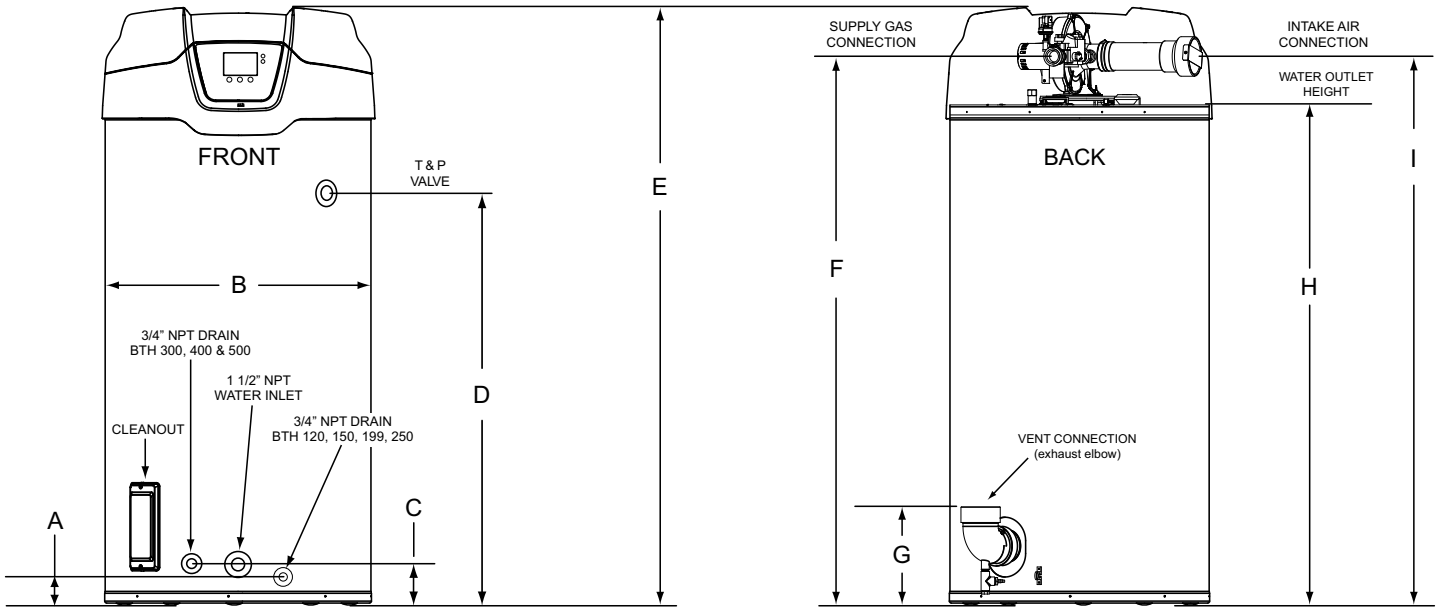

MODEL	DIMENSIONS									SHIP WEIGHT STD	SHIP WEIGHT ASME
	A	B	C	D	E	F	G	H	I		
	INCHES/CM	INCHES/CM	INCHES/CM	INCHES/CM	INCHES/CM	INCHES/CM	INCHES/CM	INCHES/CM	INCHES/CM	LBS/KG	LBS/KG
BTH 120	3/7.62	27.75/70.5	6.3/16	35/88.9	55.5/141	48/121.9	11/27.9	42/106.7	47.5/120.6	460/208	490/222
BTH 150	3/7.62	27.75/70.5	6.3/16	55.5/141	75.5/191.8	68.5/174	11/27.9	63/160	69/175.3	555/252	595/270
BTH 199 250	3/7.62	27.75/70.5	6.3/16	55.5/141	75.5/191.8	75.5/191.8	11/27.9	63/160	69/175.3	555/252	595/270
BTH 300, 400, 500	N/A	33.12/84.1	4.86/12.34	50.77/129	75.5/191.8	69/175.3	12/30.5	63/160	69/175.3	N/A	855/408

BTH 120 & 150

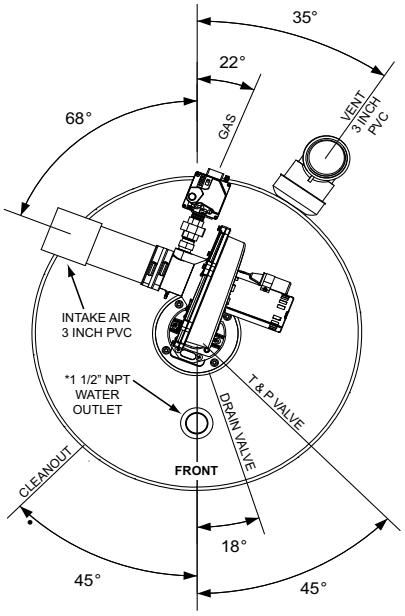

BTH 199 & 250

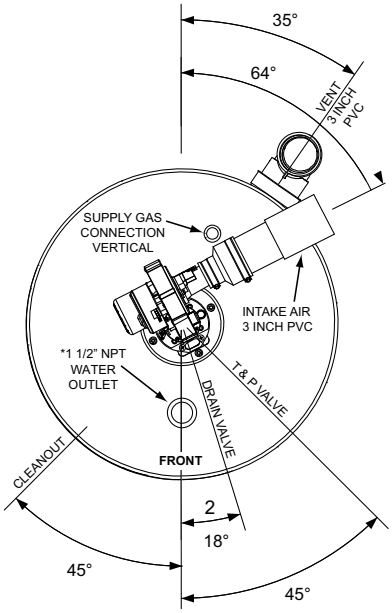

BTH 300, 400 & 500

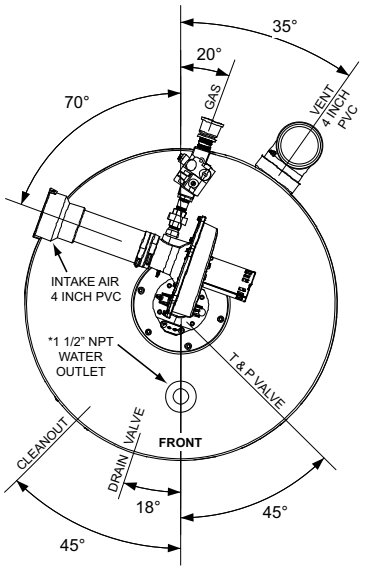

* Center line of water outlet on top of the water heaters is approximately 7 inches from the front edge of the water heater

For Technical Information and Automated Fax Service, call 800-527-1953. A. O. Smith Corporation reserves the right to make product changes or improvements without prior notice.

MAXIMUM EQUIVALENT VENT LENGTHS BTH 120 - 250

*Number of 90° Elbows Installed	3 Inch Pipe	4 Inch Pipe
	Maximum Feet (Meters)	Maximum Feet (Meters)
One (1)	45 feet (13.7 meters)	115 feet (35.0 meters)
Two (2)	40 feet (12.2 meters)	110 feet (33.5 meters)
Three (3)	35 feet (10.7 meters)	105 feet (32.0 meters)
Four (4)	30 feet (9.1 meters)	100 feet (30.5 meters)
Five (5)	-------	95 feet (29.0 meters)
Six (6)	-------	90 feet (27.4 meters)

* Maximum number of 90° elbows allowed for the vent (exhaust) pipe is four (4) when installing 3 inch pipe and six (6) when installing 4 inch pipe. Maximum number of 90° elbows allowed for intake air pipe is four (4) when installing 3 inch pipe and six (6) when installing 4 inch pipe. Two (2) 45° elbows equal one (1) 90° elbow.

MAXIMUM EQUIVALENT VENT LENGTHS BTH 300 - 500

*Number of 90° Elbows Installed	4 Inch Pipe	6 Inch Pipe
	Maximum Feet (Meters)	Maximum Feet (Meters)
One (1)	65 feet (19.8 meters)	115 feet (35.0 meters)
Two (2)	60 feet (18.2 meters)	110 feet (33.5 meters)
Three (3)	55 feet (16.8 meters)	105 feet (32.0 meters)
Four (4)	50 feet (15.2 meters)	100 feet (30.5 meters)
Five (5)	45 feet (13.7 meters)	95 feet (29.0 meters)
Six (6)	40 feet (12.2 meters)	90 feet (27.4 meters)

* Maximum number of 90° elbows allowed for the vent (exhaust) pipe is six (6). Maximum number of 90° elbows allowed on the intake air pipe is six (6). Two (2) 45° elbows equal one (1) 90° elbow.

MINIMUM SUPPLY GAS LINE SIZE		
MODEL	NATURAL GAS	PROPANE GAS
BTH 120	1/2" NPT	1/2" NPT
BTH 150	3/4" NPT	3/4" NPT
BTH 199	3/4" NPT	3/4" NPT
BTH 250	3/4" NPT	3/4" NPT
BTH 300	1 1/4" NPT	1 1/4" NPT
BTH 400	1 1/4" NPT	1 1/4" NPT
BTH 500	1 1/2" NPT	1 1/4" NPT

INSTALLATION CLEARANCES

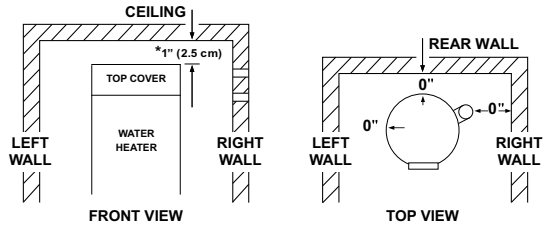

*Minimum clearance to remove top cover

RECOVERY CAPACITY

MODEL	TYPE OF GAS	INPUT BTUH	INPUT KW	Thermal Efficiency	Approx. Capacity	U.S. Gallons/Hr and Litres/Hr at TEMPERATURE RISE INDICATED												
						F°	30F°	40F°	50F°	60F°	70F°	80F°	90F°	100F°	110F°	120F°	130F°	140F°
						C°	17C°	22C°	28C°	33C°	39C°	44C°	50C°	56C°	61C°	67C°	72C°	78C°
BTH 120	NATURAL/ PROPANE	120,000	35	95%	60 U.S. Gal	GPH	461	345	276	230	197	173	154	138	126	115	106	99
					227 Litres	LPH	1744	1308	1046	872	747	654	581	523	476	436	402	374
BTH 150	NATURAL/ PROPANE	150,000	44	95%	100 U.S. Gal	GPH	576	432	345	288	247	216	192	173	157	144	133	123
					379 Litres	LPH	2179	1635	1308	1090	934	817	726	654	594	545	503	467
BTH 199	NATURAL/ PROPANE	199,900	58	95%	100 U.S. Gal	GPH	767	575	460	384	329	288	256	230	209	192	177	164
					379 Litres	LPH	2904	2178	1743	1452	1245	1089	968	871	792	726	670	622
BTH 250	NATURAL/ PROPANE	250,000	73	95%	100 U.S. Gal	GPH	960	720	576	480	411	360	320	288	262	240	221	206
					379 Litres	LPH	3632	2724	2179	1816	1557	1362	1211	1090	991	908	838	778
BTH 300	NATURAL/ PROPANE	300,000	88	96%	130 U.S. Gal	GPH	1164	873	699	582	499	436	388	349	318	291	269	250
					492 Litres	LPH	4406	3304	2644	2203	1888	1652	1469	1322	1201	1102	1017	945
BTH 400	NATURAL/ PROPANE	399,900	117	96%	130 U.S. Gal	GPH	1552	1164	931	776	665	582	517	466	423	388	359	332
					492 Litres	LPH	5875	4406	3525	2938	2518	2203	1958	1763	1602	1469	1356	1259
BTH 500	NATURAL/ PROPANE	499,900	146	95%	130 U.S. Gal	GPH	1919	1439	1151	959	822	720	640	576	523	480	443	411
					492 Litres	LPH	7263	5447	4358	3631	3113	2724	2421	2179	1981	1816	1676	1556

Recovery capacities are based on heater performance at 95% and 96% thermal efficiency.
Add "A" to model number when ordering ASME. Optional on 120-250 models. Standard on 300 - 500 models.
Maximum gas supply pressure for 120-250: 10.5" W.C. natural gas 14" W.C. propane. Maximum gas supply pressure for 300-500 10.0" W.C. natural gas 12.0" W.C. propane. Electrical requirements: 120 VAC/60Hz, Blower 2.2 Amps FL, Igniter 4.0 Amps.

For Technical Information and Automated Fax Service, call 800-527-1953. A. O. Smith Corporation reserves the right to make product changes or improvements without prior notice.

SUGGESTED SPECIFICATION

(Natural or Propane) gas water heater(s) shall be A. O. Smith Cyclone Xi model # BTH 199 or equal, with up to 96% thermal efficiency, a storage capacity of 100 gallons, an input rating of _____ BTUs per hour, a recovery rating of _____ gallons per hour (gph) at 100°F rise and a maximum hydrostatic working pressure of 160 PSI. Water heater(s) shall: 1. Have seamless glass-lined steel tank construction, with glass lining applied to all water-side surfaces after the tank has been assembled and welded; 2. Meet or exceed the thermal efficiency and/or standby loss requirements of the U. S. Department of Energy and current edition of ASHRAE/IESNA 90.1 3. Have foam insulation and a CSA Certified and ASME rated T&P relief valve; 4. Have a down-fired power burner designed for precise mixing of air and gas for optimum efficiency, requiring no special calibration on start-up; 5. Be approved for 0˝ clearance to combustibles.

Heater shall be supplied with maintenance-free powered anode.

The control shall be an integrated solid-state temperature and ignition control device with integral diagnostics, graphic user interface, fault history display, and shall have digital temperature readout.

1. The BTH-120-250 models are design-certified by CSA International, according to ANSI Z21.10.3 - CSA 4.3 standards governing storage-type water heaters. The BTH-300-500 models are design-certified by Underwriter's Laboratories (UL), Inc., according to ANSI Z21.10.3 - CSA 4.3 standards governing storage type water heaters; 2. Meet or exceed the thermal efficiency and standby loss requirements of the U. S. Department of Energy and current edition ASHRAE/IESNA 90.1. Complies with SCAQMD Rule 1146.2 and other air quality management districts with similar requirements.

120K-250K BTU Input:

For Standard Power Venting: Water heater(s) shall be suitable for standard power venting using a (3" or 4") ____ diameter PVC pipe for a total distance of (50ft. or 120 ft.) ____ equivalent feet of vent piping.

For Power Direct Venting: Water heater(s) shall be suitable for power direct venting using a (3" or 4") ____ diameter PVC pipe for a total distance of (50ft. or 120 ft.) ____ equivalent feet of vent piping and (50ft. or 120 ft.) ____ equivalent feet of intake air piping.

300K - 500K BTU Input:

For Standard Power Venting: Water heater(s) shall be suitable for standard power venting using a (4" or 6") ____ diameter PVC pipe for a total distance of (70ft. or 120 ft.) ____ equivalent feet of vent piping.

For Power Direct Venting: Water heater(s) shall be suitable for power direct venting using a (4" or 6") ____ diameter PVC pipe for a total distance of (70ft. or 120 ft.) ____ equivalent feet of vent piping and (70ft. or 120 ft.) ____ equivalent feet of intake air piping.

Operation of the water heater(s) in a closed system where thermal expansion has not been compensated for (with a properly sized thermal expansion tank) will void the warranty.

Water heater should incorporate the iCOMM™ system for remote monitoring, leak detection and fault alert.