QUALITY DESIGNED
McGUIRE
PRODUCTS

McGUIRE MFG. CO., INC.
60 Grandview Court
P.O. Box 746 ♣ Cheshire, CT 06410
203-699-1801 ♣ Fax 203-699-1813
www.mcguiremfg.com

Product Specification

Part No.

2166, 2166LK, 2169, 2169LK

Closet Supply
1/2" I.P.S. x O.D.

Job Name: _____ **Submittal Number:** _____

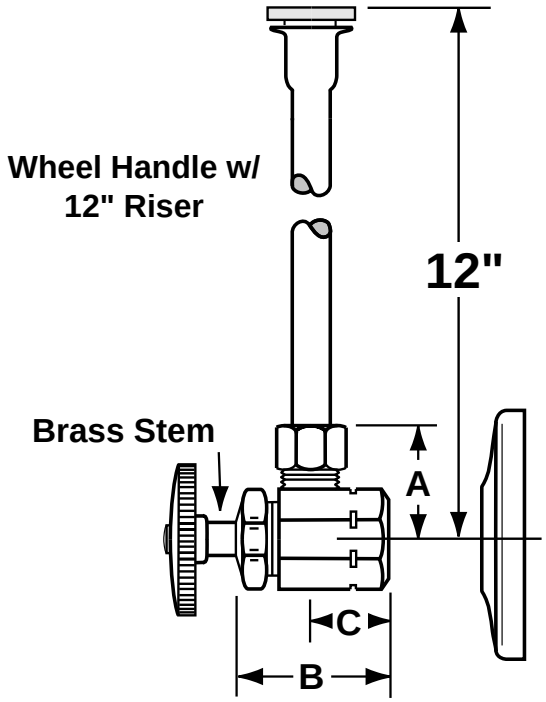

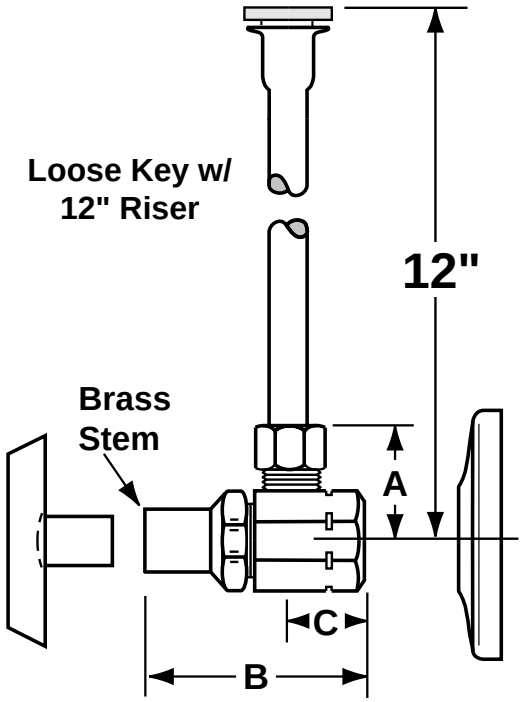

NO.	ROUGHING MEASUREMENTS	A	B	C
2166	1/2" I.P.S. x 3/8" O.D.	1	1-1/2"	3/4"
2166LK	1/2" I.P.S. x 3/8" O.D.	1	2-1/4"	3/4"
2169	1/2" I.P.S. x 1/2" O.D.	1	1-1/2"	3/4"
2169LK	1/2" I.P.S. x 1/2" O.D.	1	2-1/4"	3/4"

LK designates *Loose Key*

CSA Certified

See options and accessories section for details on product variations.

Specifications:

Supply kit shall include chrome plated brass stops with full turn brass stem, no plastic, (12, 15, 20) inch chrome plated copper risers and (shallow, deep, bell) (steel, brass) or (forged brass with set screw) flange. Inlet shall be (3/8, 1/2) inch (IPS, sweat, compression). Outlet shall be (3/8, 1/2) inch (IPS, compression). Supply kit shall be McGuire _____. Supply kit shall be certified by CSA or other recognized testing authority and bear manufacturer and testing mark. Stop to be certified to 200 psi line pressure.

© Copyright 2002 MCGUIRE MANUFACTURING COMPANY Printed U.S.A.